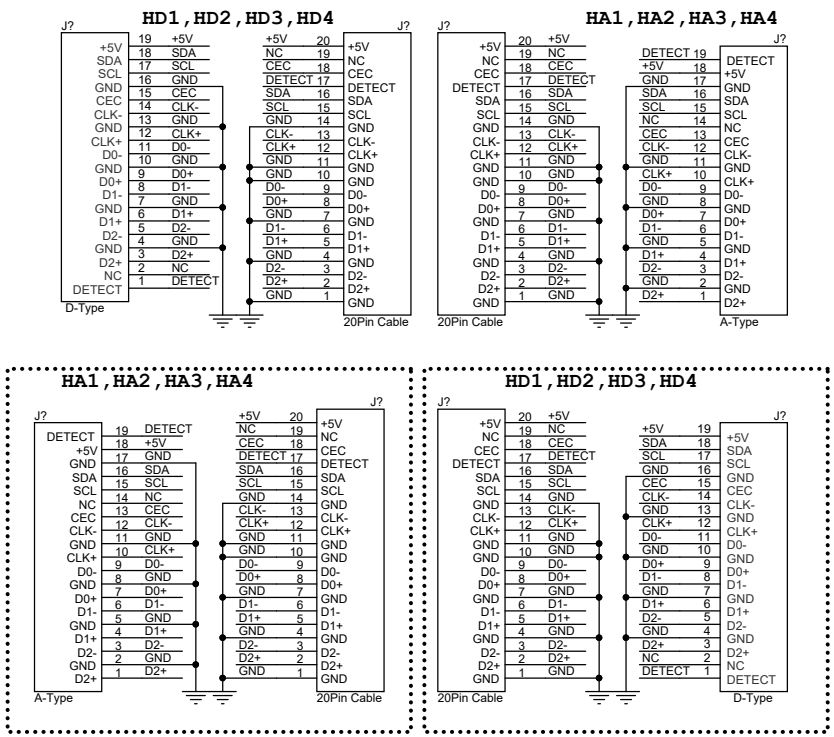
HD1,HD2,HD3,HD4
HA1,HA2,HA3,HA4
HA1,HA2,HA3,HA4
HD1,HD2,HD3,HD4
D-Type
20Pin Cable
A-Type
20Pin Cable
A-Type
20Pin Cable
D-Type

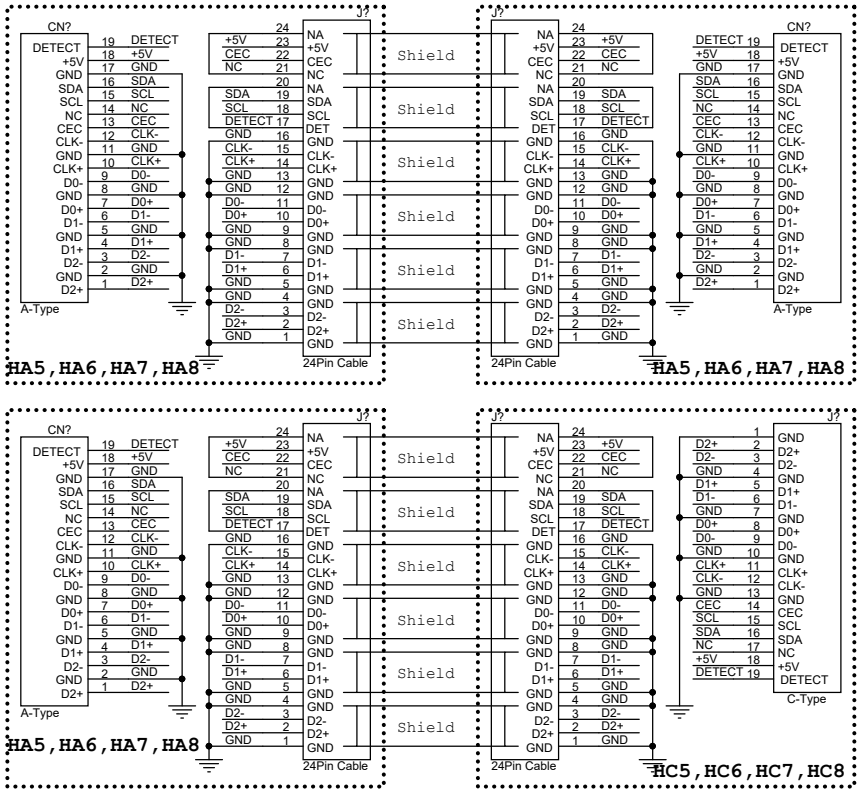
HA5,HA6,HA7,HA8
HA5,HA6,HA7,HA8
HC5,HC6,HC7,HC8
Shield
A-Type
24Pin Cable
C-Type

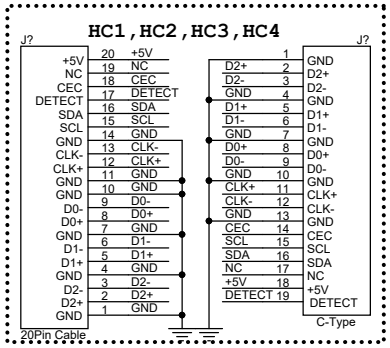
HC1,HC2,HC3,HC4
20Pin Cable
C-Type